SIEMENS

iQ500, Built-in microwave oven, Black
BF555LMB1B

38 cm high built-in microwave for defrosting, reheating or preparation of dishes in the shortest possible time.

- ✓ Automatic programs ensure excellent results - cookControl7.
- ✓ The touchControl allows the temperature to be controlled by entering it directly or by moving the slider with a single finger.
- ✓ 900 Watts maximum: ideal for heating liquids
- ✓ The side-opening hinged door: ideal for elevated installation.

Features

Technical Data

Additional functions:	Microwave only
Control panel:	Electronic
Dimensions:	382x594x388 mm
Cavity dimensions:	208.0 x 328.0 x 369.0 mm
Length electrical supply cord:	130 cm
Weight:	17.4 kg
Gross weight:	21.4 kg
EAN code:	4242003960295
Maximum micro-wave power[1]:	900 W
Connection Rating:	1450 W
Fuse protection:	10 A
Nominal power:	220-230 V
Frequency:	50 Hz
Plug type:	GB plug
Included accessories:	1 x turntable

4 242003 960295

[1] Intelligent inverter technology: maximum output power will be regulated to 600 W when used in longer operation

SIEMENS

iQ500, Built-in microwave oven, Black
BF555LMB1B

Features

Features
- Maximum microwave power level: 900 W and the following options 180 W, 360 W, 600 W, 90 W, 900 W
- Cavity volume: 25 l

Design
- Cavity inner surface: stainless steel

Cleaning

Programmes/functions
- LED display, White display with blue indicator lights
- Electronic oven clock timer
- Touch control, touchSlider, Start button With steel trim
- User-friendly electronics: extremely
- easy and comfortable operation
- cookControl, 7
- 4 defrost and 3 cooking programmes in microwave function
- 1 memory setting
- LED light
- 31.5 cm Glass turntable
- Left hinged door
- Electronic door opening button
- Touch key operation

Accessories
- 1 x turntable

Features
- Automatic safety switch off
- Door contact switch
- Integral cooling fan

Technical information
- 130 cm Cable length
- Total connected load electric: 1.45 KW
- Nominal voltage: 220 - 230 V
- Installation in tall housing

Performance/technical information
- Appliance dimension (hxwxd): 382 mm x 594 mm x 388 mm
- Niche dimension (hxwxd): 380 mm - 382 mm x 560 mm - 568 mm x 550 mm
- “For-details-on-installation-and-ventilation requirements – please refer to the installation manual prior to fitting.”

SIEMENS

iQ500, Built-in microwave oven, Black
BF555LMB1B

Dimensioned drawings

Microwave,
corner installation

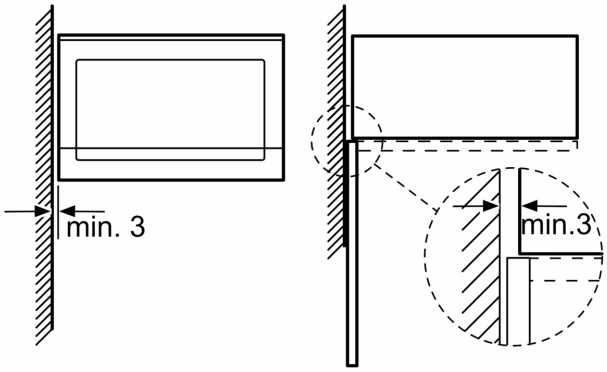

Measurements in mm

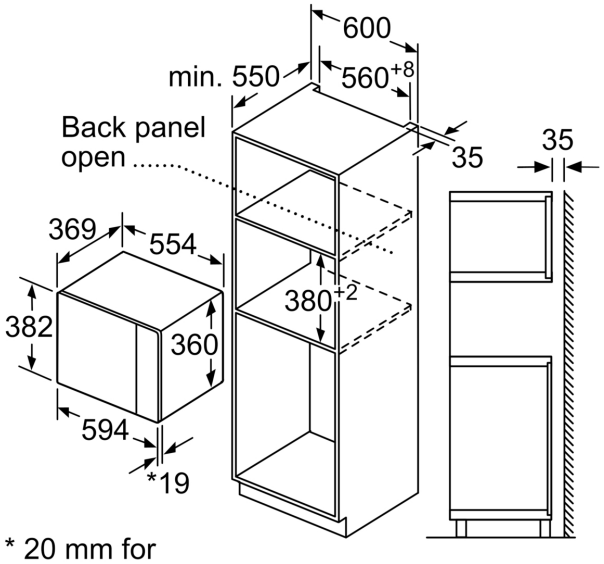

* 20 mm for
metal fascia

measurements in mm

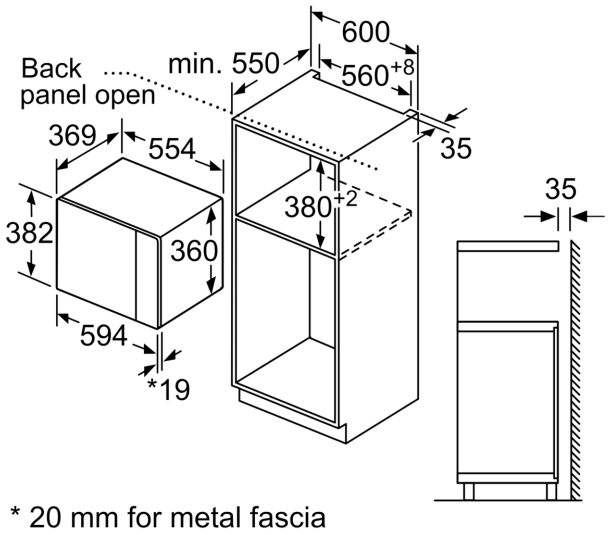

* 20 mm for metal fascia

measurements in mm

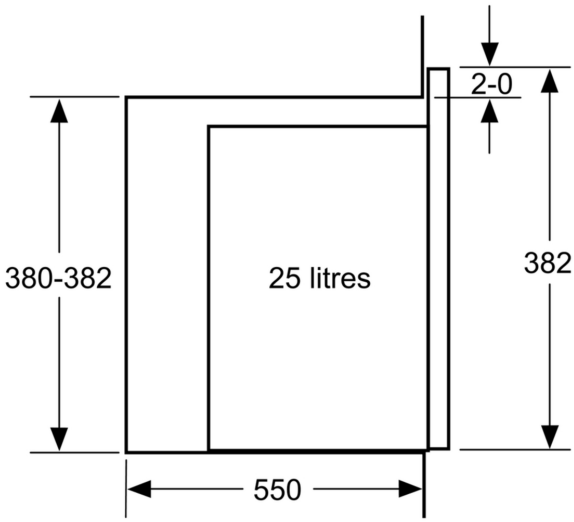

measurements in mm